ABAX
KINGFISHER

PIP

PRODUCT DATA SPECIFICATION

ABAX KINGFISHER
Inspired by Service - Driven by Innovation

Abax Kingfisher Pty Ltd
1 Cowpasture Place
(PO Box 7250)
Wetherill Park,
NSW 2164, Australia

Pip

	Description	
SIZES & DIMENSIONS	**Overall Dimensions:** 74mmDia x 50mmD **Surface Cutout:** 60mmDia **Recommended Surface Thickness:** 1mm – 30mm	
MATERIALS	Body and backing made from Nylon Socket Fascia constructed from Polycarbonate Bezel Surround made from ABS	
CONFIGURATION	**1:** 1x TUF **2:** 1x GPO	
POWER LEAD TYPE	2m Lead with a 10a three-pin plug 800m Lead J Coupler Soft Wiring	
FEATURES	Specifically designed for panel mounting Ideal for lockers and soft furnishings Minimum 44mm required depth Works best for panels with limited rear access Large range of AC Power and TUF-PD sockets available	Manufactured using ISO9001 quality controlled components Designed and manufactured complying with applicable national/international safety and EMC standards 100% tested
WARRANTY	10 Year warranty	
LEAD TIME	35 Working Days	
FINISH	<u>Socket Facias:</u> Black White Grey <u>Standard Bezel Surrounds:</u> Grey White Black	
CUSTOMISABLE	N/A	
ACCESSORIES	N/A	

Abax Kingfisher Pty Ltd
1 Cowpasture Place
(PO Box 7250)
Wetherill Park,
NSW 2164, Australia

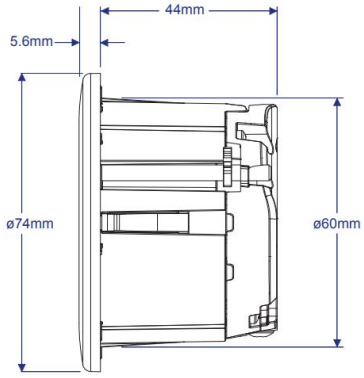

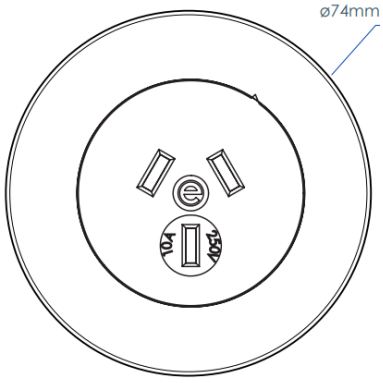

Standard Finishes

Grey

White

Black