ABAX
KINGFISHER

MOVE MEETING

PRODUCT DATA SPECIFICATION

Abax Kingfisher Pty Ltd
1 Cowpasture Place
(PO Box 7250)
Wetherill Park,
NSW 2164, Australia

Move Meeting

	Description
DIMENSIONS	2520mmW x 1500mmD x 1400mmH Worktop: 1060mmW x 1000mmD x 730mmH
FABRIC METERAGE	Outside Fabric: 8.10m Inside Fabric: 8m Couch: 4m Seat: 3m
MATERIALS & CONSTRUCTION	Metal Frame High-Quality Melamine Top Heavy Duty Commercial Foam Heavy Duty Commercial Grade Upholstery
FEATURES	Move Meeting is a 4-seater booth that provides a high level of privacy for users. This enclosed setting is ideal for anything from focussed brainstorming sessions to casual study sessions.
WARRANTY	10 Years
LEAD TIME	35 working days on Stone Grey/Charcoal Grey two-tone colour scheme 12 – 14 weeks on all other standard colours
FINISH	Move Standard Upholstery Range
CUSTOMISABLE	Custom upholstery available on request – Additional lead times apply. 35% surcharge applies.

Abax Kingfisher Pty Ltd
1 Cowpasture Place
(PO Box 7250)
Wetherill Park,
NSW 2164, Australia

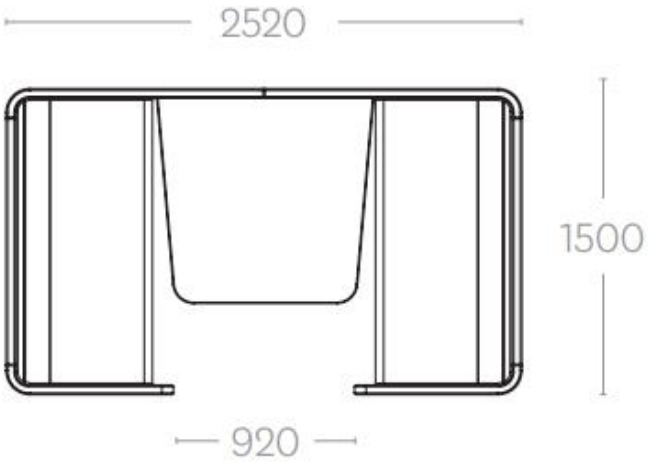

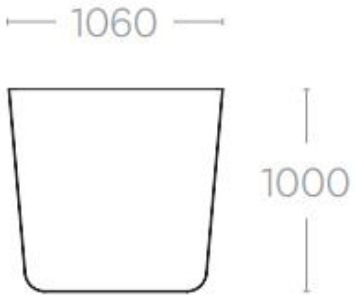

Worktop

ABAX KINGFISHER
Inspired by Service - Driven by Innovation

Abax Kingfisher Pty Ltd
1 Cowpasture Place
(PO Box 7250)
Wetherill Park,
NSW 2164, Australia

Move Range Standard Upholstery

Ash Grey

Stone Grey

Charcoal Grey

Deep Blue

Ice Blue

Emerald Green

Bumblebee Yellow

Avocado Green

Sunset Orange

Chilli Red